COLMET spray booths

GUY WIRE INSTALL

INSTALLATION DETAIL SHEET 21

TLO

8-16-04

NTS

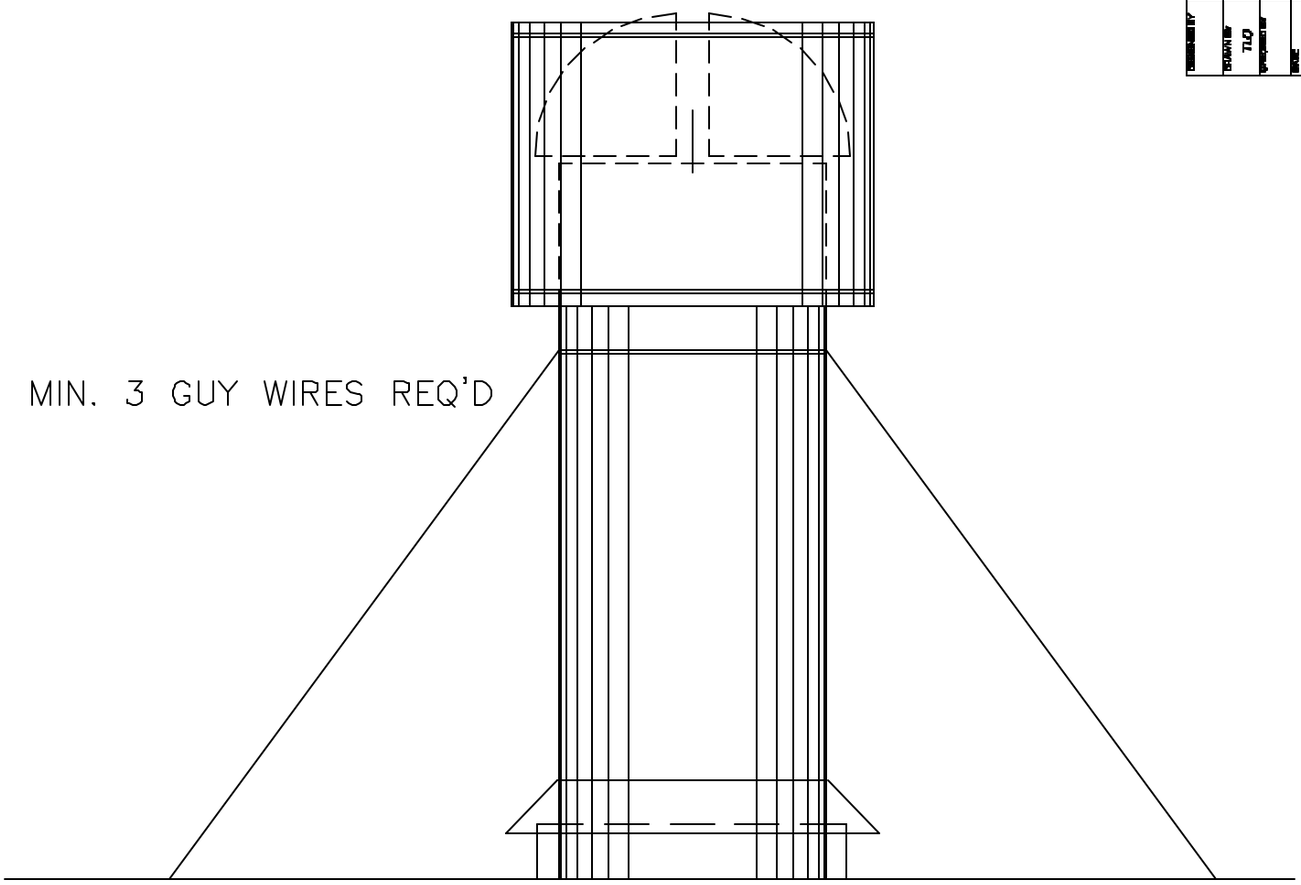

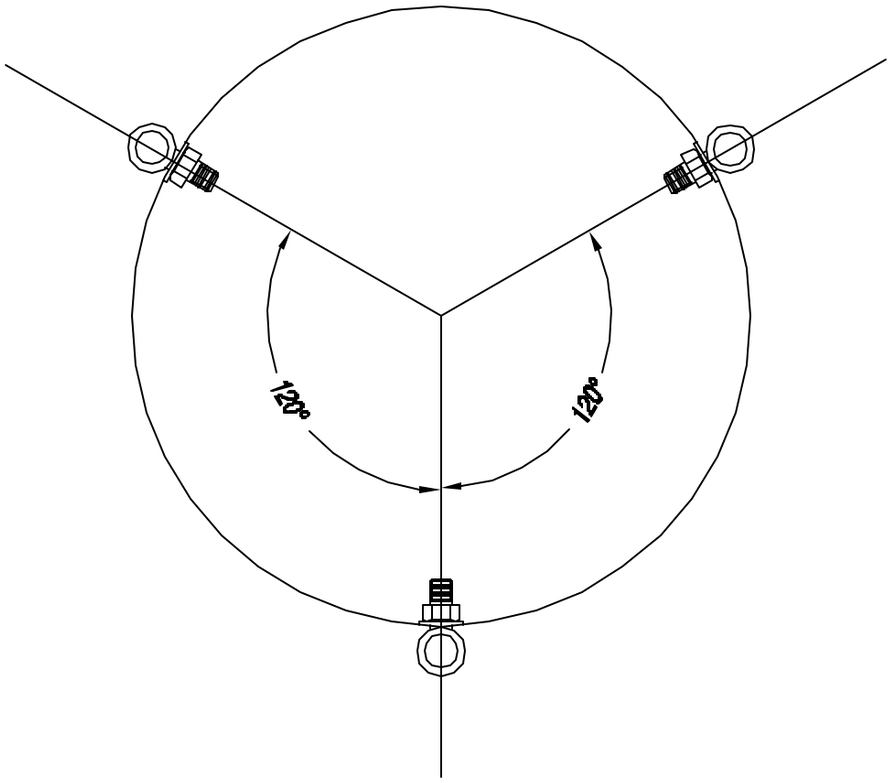

EYE BOLT PLACEMENT