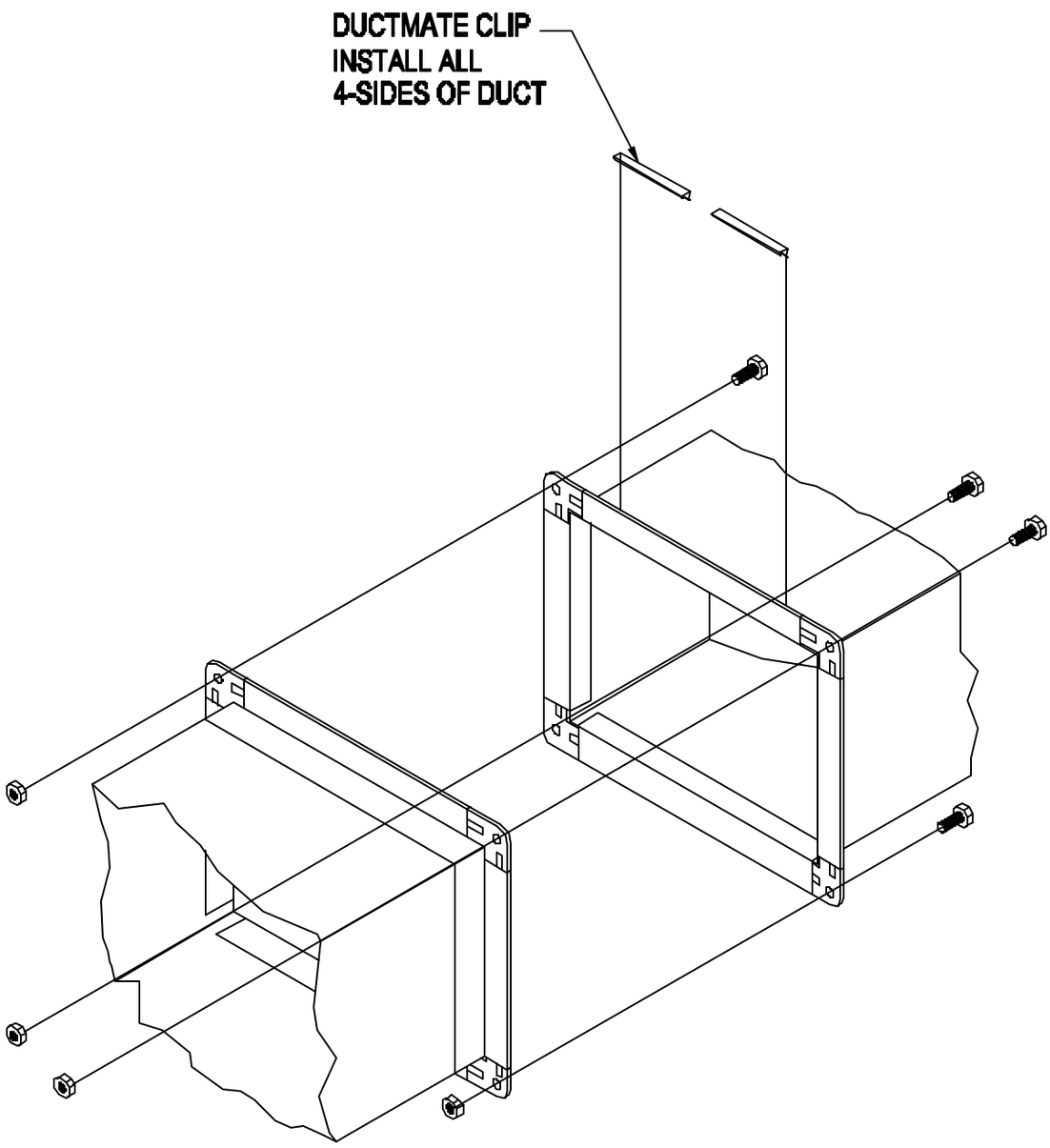

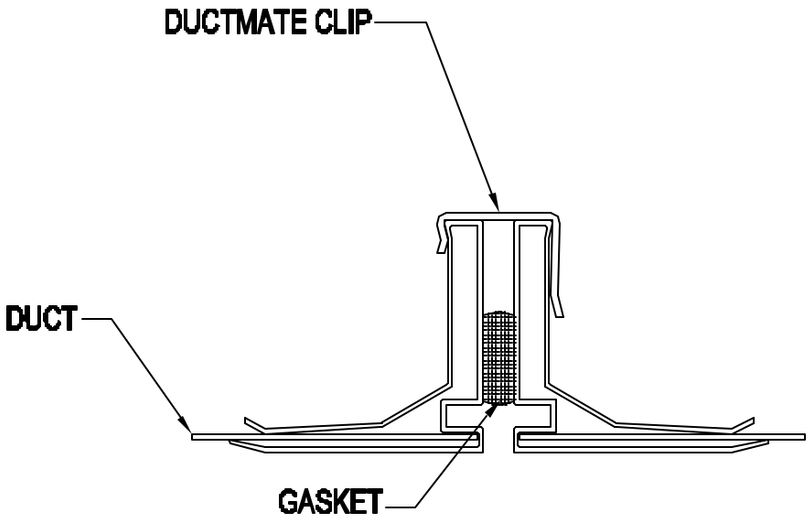

ENDVIEW

COLMET spray booths

DUCTMATE INSTALL

INSTALLATION DETAIL SHEET 20

TLO

6-16-04

NTS