REQUIRED FOR OUTDOOR APPLICATIONS OF MOTOR FOR WEATHER PROOFING

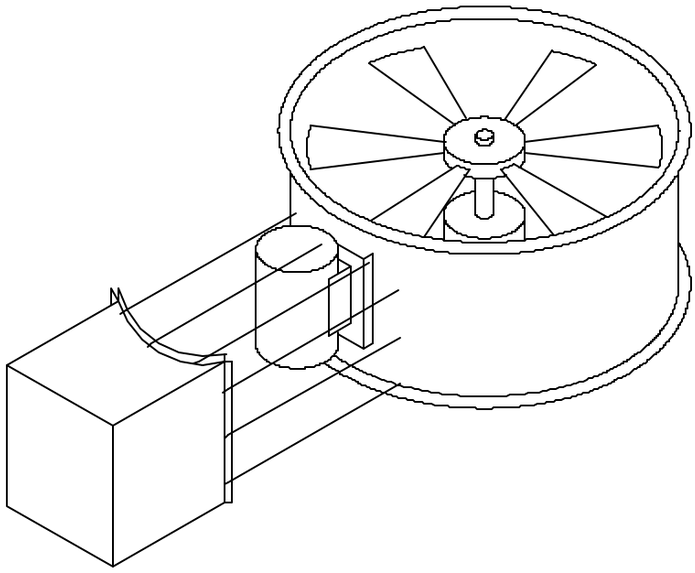

MOTOR COVER DETAIL

COMET spray booths

DRAWN BY: TLO

DRAWING NO.: MOTOR COVER

DATE: 5-16-04

SCALE: NTS

TITLE: INSTALLATION DETAIL SHEET 18

SHEET 18