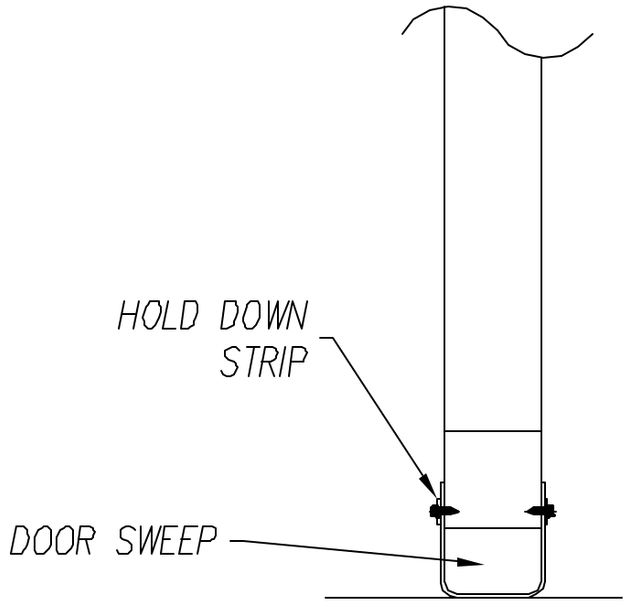


END VIEW

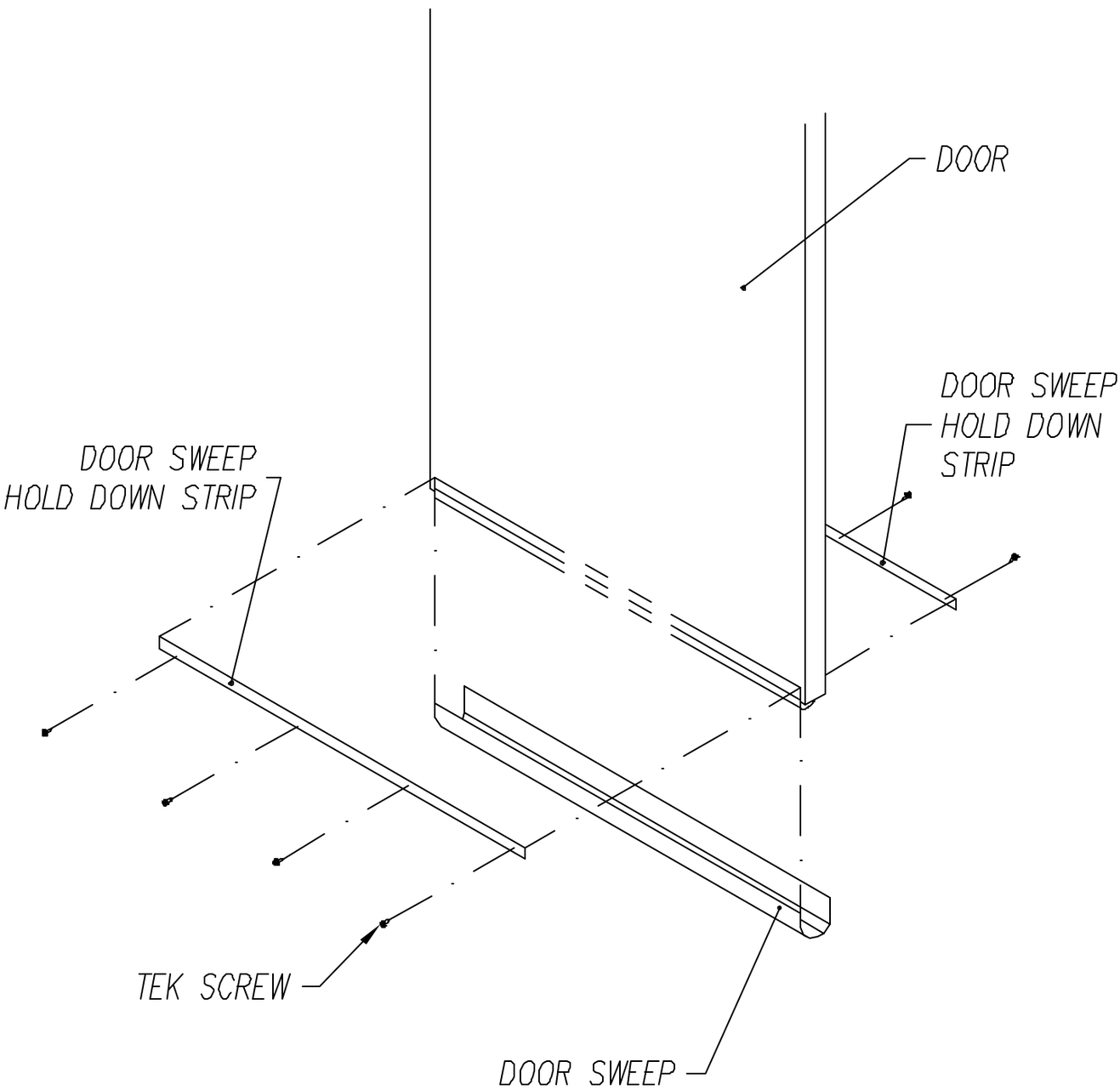


COLMET spray booths

DOOR SWEEP INSTALLATION

PRODUCT DOOR SWEEP

INSTALLATION DETAIL SHEET 2

PW

NTS