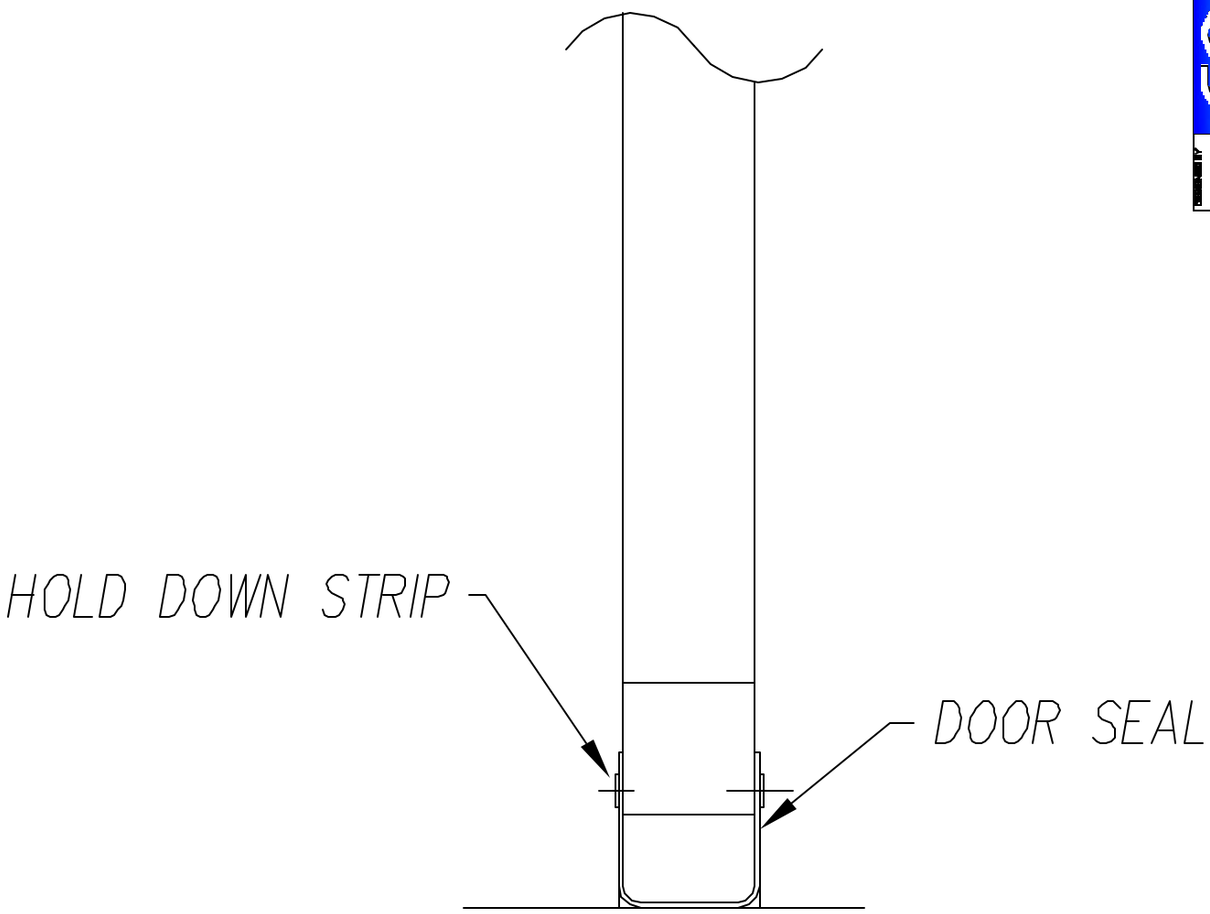

THRESHOLD SEAL DETAIL

COLMET spray booths

DRAWN BY: TLO

DOOR SEAL INSTALLATION

ALL BOOTHS

DATE: 6-16-04

SCALE: NTS

INSTALLATION DETAIL SHEET 8