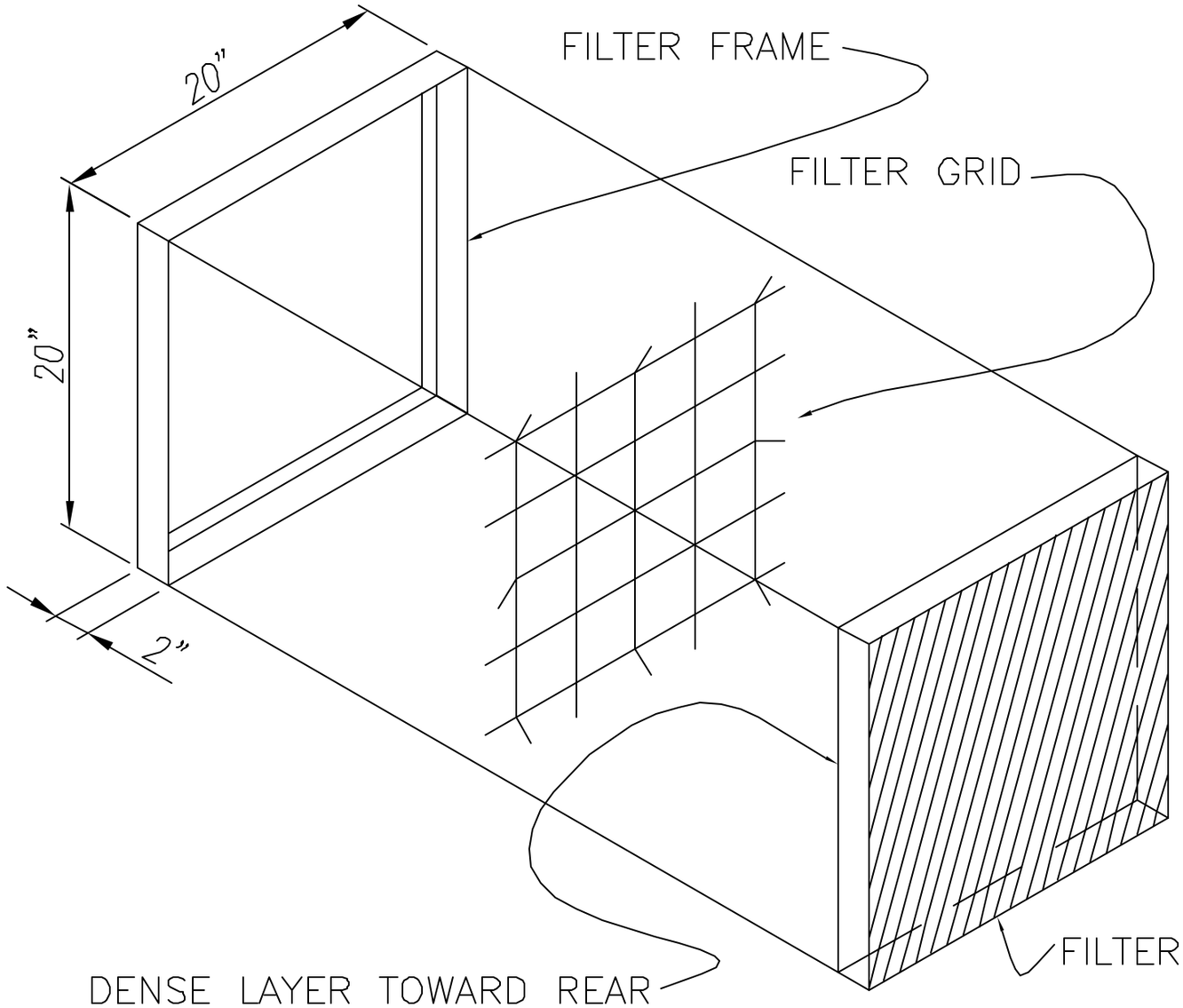

COL-MET
spray booths

DRAWN BY	PW
DATE	5/27/04
SCALE	NTS
PROJECT	FILTER INSTALLATION
	20" X 20" FILTER
	INSTALLATION DETAIL SHEET 1